S.C. URB RULMENTI SUCEAVA S.A.

keeps you rolling....

SINGLE ROW DEEP GROOVE BALL BEARINGS

Ball bearings are the most popular types among rolling bearings, widely used in a variety of industries.
Single row deep groove ball bearings are manufactured by S.C. URB Rulmenti Suceava S.A. in a varied range, both of standard design and various constructive versions.

Single row deep groove ball bearings can accommodate radial load and axial load in one direction and also are suitable for operation at high speed, with low noise and low vibration. Both ring and rolling element need to have high mechanical strength, rolling-fatigue resistance, hardness and wear-resistance. Furthermore, their material should have excellent dimension stability to prevent performance deterioration caused by dimensional changes. Most commonly used material that satisfy all the above conditions is a vacuum degassed high carbon chrome bearing steel 100Cr6 – ISO 683-17 (DIN 17320 or SAE 52100).
The rolling element retainer (or cage as it is also referred to) in order to space apart the rolling elements are manufactured from pressed steel.
Sealed bearings employing steel shields or rubber seals are filled with the appropriate volume of grease when manufactured.

Main applications:
Automobile: Front wheels, differential pinion shafts, electric devices
Electric Equipment: High frequency motors, electric appliances for domestic use
Others: Machine tool spindles, construction equipment, railway rolling stock, agricultural equipment, equipment for other industrial uses.

Bearing Shields and Seals:
A shield (non-contact) or seal (contact) is often installed to retain lubricant and to prevent contamination from entering the bearing raceway.
Some common combination of shields and seals bearings manufactured in URB are listed below:

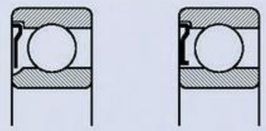

*Type **Z** and **ZR**: - Single Steel Shield (non-contact shields pressed into outer ring*

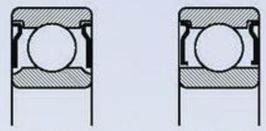

*Type **2Z (ZZ)** and **2ZR**: - Double Steel Shield (non-contact shields pressed into outer ring)*

*Type **RS** and **RSR**: – Single Rubber Seal (contact rubber seal)*

*Type **2RS** and **2RSR**: – Double Rubber Seals (contact rubber seals)*

SINGLE ROW DEEP GROOVE BALL BEARINGS

S.C. URB RULMENTI SUCEAVA S.A.

Deep groove ball bearings can also be supplied in different constructive version such as:
Open
K – Inner ring with tapered bore
N – Circular groove without snap ring
NR – Circular groove with snap ring
ZNR (or **ZNRB**) – one shield and circular groove with snap ring
2ZNR – two shields and circular groove with snap ring
UG – Outer ring with grooves for sealed without seals or shields

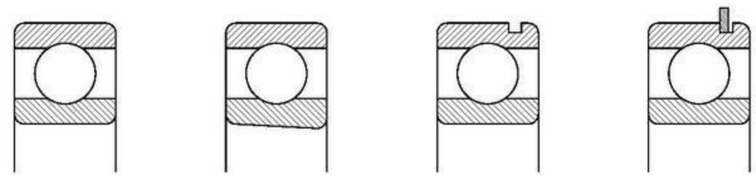

OPEN K N NR

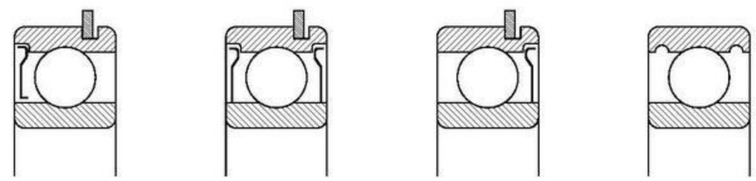

ZRNR 2ZRNR ZRNRB UG

Technical execution conditions:
Dimensions. The overall dimensions of single row deep groove ball bearings are in accordance with ISO 15.
Tolerances. Single row deep groove ball bearings are in generally manufactured to the normal tolerance class P0. At request, they can also be manufactured to the tolerance classes P6, P5 or P4, according to ISO 492, ISO 199.
Radial clearance for deep groove ball bearings - according to ISO 5753

Bore diameter d		Clearance group symbol for bearing with cylindrical bore									
		C2		Normal		C3		C4		C5	
		Clearance group symbol for bearing with tapered bore									
		-		C2		Normal		C3		C4	
over	up to	min.	max.	min.	max.	min.	max.	min.	max.	min.	max.
mm		µm									
10	18	0	9	3	18	11	25	18	33	25	45
18	24	0	10	5	20	13	28	20	38	28	48
24	30	1	11	5	20	13	28	23	41	30	53
30	40	1	11	6	20	15	33	28	46	40	64
40	50	1	11	6	23	18	36	30	51	45	73
50	65	1	15	8	28	23	43	38	61	55	90
65	80	1	15	10	30	25	51	46	71	65	105
80	100	1	18	12	36	30	58	53	84	75	120
100	120	2	20	15	41	36	66	61	97	90	140
120	140	2	23	18	48	41	81	71	114	105	160

Basic load ratings - are established in accordance with ISO 76 and ISO 281.

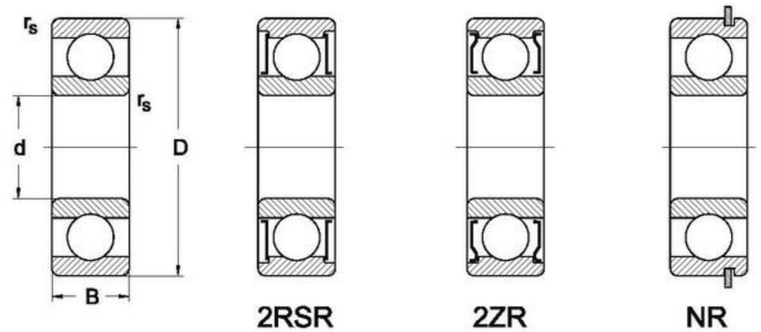

Dimensions				Basic Radial Load		Speed Limit		Bearing Type	Weight
d	D	B	r_{smin}	Dynamic C_r	Static C_{or}	Grease	Oil		
[mm]	[mm]	[mm]	[mm]	[kN]	[kN]	[min^{-1}]	[min^{-1}]	-	-
10	26	8	0.3	4.55	1.95	28000	34000	**6000**	0.020
10	26	8	0.3	4.55	1.95	28000		**6000-2ZR**	0.020
10	26	8	0.3	4.55	1.95	17000		**6000-2RSR**	0.020
10	28	8	0.3	4.55	1.95	28000	34000	**16100**	0.023
10	30	9	0.6	5.1	2.4	32000	38000	**6200**	0.032
10	30	9	0.6	5.1	2.4	26000		**6200-2ZR**	0.032
10	30	9	0.6	5.1	2.4	17000		**6200-2RSR**	0.032
10	35	11	0.6	8.1	3.45	20000	26000	**6300**	0.057
10	35	11	0.6	8.1	3.45	20000		**6300-2ZR**	0.057
10	35	11	0.6	8.1	3.45	14000		**6300-2RSR**	0.057
12	28	8	0.3	5.1	2.4	26000	32000	**6001**	0.022
12	28	8	0.3	5.1	2.4	26000		**6001-2ZR**	0.022
12	28	8	0.3	5.1	2.4	17000		**6001-2RSR**	0.022
12	30	8	0.3	5.1	2.4	26000	32000	**16101**	0.026
12	32	10	0.6	6.8	3.05	22000	28000	**6201**	0.037
12	32	10	0.6	6.8	3.05	22000		**6201-2ZR**	0.037
12	32	10	0.6	6.8	3.05	15000		**6201-2RSR**	0.037
12	32	14	0.6	6.8	3.05	22000		**62201-2RSR**	0.049
12	37	12	1	9.65	4.15	19000	24000	**6301**	0.065
12	37	12	1	9.65	4.15	19000		**6301-2ZR**	0.065
12	37	12	1	9.65	4.15	12000		**6301-2RSR**	0.065
15	32	8	0.3	4	2.05	22000	28000	**16002**	0.037
15	32	9	0.3	5.6	2.85	22000	28000	**6002**	0.031
15	32	9	0.3	5.6	2.85	22000		**6002-2ZR**	0.031
15	32	9	0.3	5.6	2.85	14000		**6002-2RSR**	0.031
15	30	9	0.6	7.65	3.75	19000	24000	**6202**	0.046
15	35	11	0.6	7.65	3.75	19000		**6202-2ZR**	0.046
15	35	11	0.6	7.65	3.75	13000		**6202-2RSR**	0.046
15	35	14	0.6	7.65	3.75	19000		**62202-2RSR**	0.053
15	42	13	1	11.4	5.45	17000	20000	**6302**	0.092
15	42	13	1	11.4	5.45	17000		**6302-2ZR**	0.092
15	42	13	1	11.4	5.45	11000		**6302-2RSR**	0.092
15	42	17	1	11.4	5.45	17000		**62302-2RSR**	0.099
17	35	8	0.3	6	3.25	20000	26000	**16003**	0.040

SINGLE ROW DEEP GROOVE BALL BEARINGS

S.C. URB RULMENTI SUCEAVA S.A.

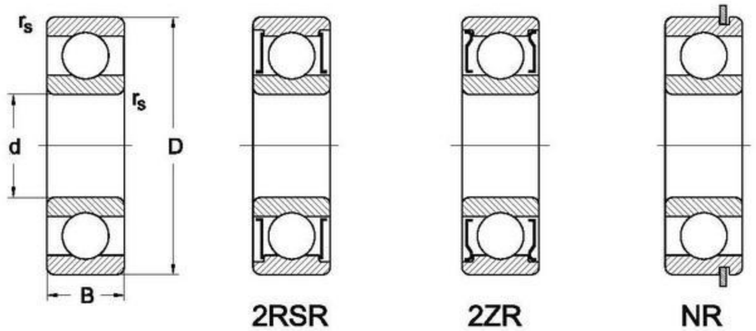

Dimensions				Basic Radial Load		Speed Limit		Bearing Type	Weight
d	D	B	r_{smin}	Dynamic C_r	Static C_{or}	Grease	Oil		
[mm]	[mm]	[mm]	[mm]	[kN]	[kN]	[min^{-1}]	[min^{-1}]	-	-
17	35	10	0.3	6	3.25	20000	26000	**6003**	0.042
17	35	10	0.3	6	3.25	20000		**6003-2ZR**	0.042
17	35	10	0.3	6	3.25	12000		**6003-2RSR**	0.042
17	40	12	0.6	9.55	4.8	17000	20000	**6203**	0.070
17	40	12	0.6	9.55	4.8	17000		**6203-2ZR**	0.070
17	40	12	0.6	9.55	4.8	11000		**6203-2RSR**	0.070
17	40	12	0.6	9.55	4.8	17000	20000	**6203NR**	0.070
17	40	16	1	9.55	4.8	17000	20000	**62203-2RSR**	0.070
17	47	14	1	13.4	6.55	16000	19000	**6303**	0.120
17	47	14	1	13.4	6.55	16000		**6303-2ZR**	0.120
17	47	14	1	13.4	6.55	11000		**6303-2RSR**	0.120
17	47	19	1	13.4	6.55	16000		**62303-2RSR**	0.145
17	62	17	1.1	22.5	11	12000	15000	**6403**	0.285
17	62	17	1.1	22.5	11	12000	15000	**6403NR**	0.285
20	42	8	0.3	7.95	4.5	17000	20000	**16004**	0.050
20	42	12	0.6	9.4	5.05	17000	20000	**6004**	0.070
20	42	12	0.6	9.4	5.05	17000		**6004-2ZR**	0.070
20	42	12	0.6	9.4	5.05	17000		**6004-2RSR**	0.070
20	47	14	1	12.8	6.65	15000	18000	**6204**	0.118
20	47	14	1	12.8	6.65	15000		**6204-2ZR**	0.118
20	47	14	1	12.8	6.65	10000		**6204-2RSR**	0.118
20	47	14	1	12.8	6.65	15000	18000	**6204NR**	0.118
20	47	18	1	12.8	6.65	15000		**62204-2RSR**	0.131
20	52	15	1.1	15.9	7.9	13000	16000	**6304**	0.158
20	52	15	1.1	15.9	7.9	13000		**6304-2ZR**	0.158
20	52	15	1.1	15.9	7.9	8000		**6304-2RSR**	0.158
20	52	15	1.1	15.9	7.9	13000	16000	**6304NR**	0.158
20	52	21	1.1	15.9	7.9	13000		**62304-2RSR**	0.197
20	72	19	1.1	31	15.2	10000	13000	**6404**	0.420
22	50	14	1	12.9	6.8	15000	17000	**62/22**	0.118
22	50	14	1	12.9	6.8	15000		**62/22-2ZR**	0.118
22	50	14	1	12.9	6.8	15000		**62/22-2RSR**	0.118
22	56	16	1.1	18.5	9.5	13000	15000	**63/22**	0.201
22	56	16	1.1	18.5	9.5	13000		**63/22-2ZR**	0.201
22	56	16	1.1	18.5	9.5	13000		**63/22-2RSR**	0.201
25	47	8	0.3	8.4	5.1	15000	18000	**16005**	0.058

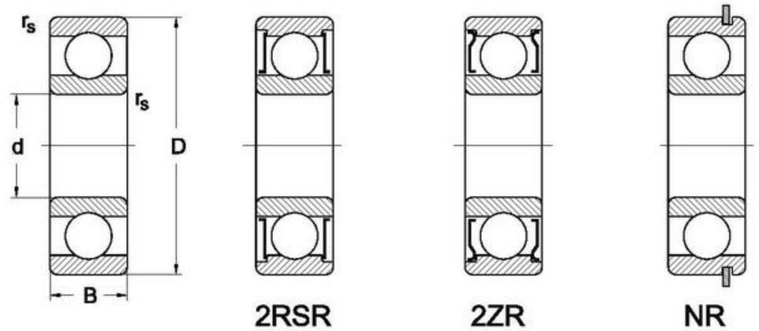

Dimensions				Basic Radial Load		Speed Limit		Bearing Type	Weight
d	D	B	r_{smin}	Dynamic C_r	Static C_{or}	Grease	Oil		
[mm]	[mm]	[mm]	[mm]	[kN]	[kN]	[min^{-1}]	[min^{-1}]	-	-
25	47	12	0.6	10.1	5.85	15000	18000	**6005**	0.086
25	47	12	0.6	10.1	5.85	15000		**6005-2ZR**	0.086
25	47	12	0.6	10.1	5.85	9500		**6005-2RSR**	0.086
25	52	15	1	14	7.85	12000	15000	**6205**	0.142
25	52	15	1	14	7.85	12000		**6205-2ZR**	0.142
25	52	15	1	14	7.85	8000		**6205-2RSR**	0.142
25	52	15	1	14	7.85	12000	15000	**6205NR**	0.142
25	52	18	1	14	7.85	12000		**62205-2RSR**	0.148
25	62	17	1.1	20.6	11.3	11000	14000	**6305**	0.250
25	62	17	1.1	20.6	11.3	11000		**6305-2ZR**	0.250
25	62	17	1.1	20.6	11.3	7500		**6305-2RSR**	0.250
25	62	17	1.1	20.6	11.3	11000	14000	**6305NR**	0.250
25	62	24	1.1	20.6	11.3	11000		**62305-2RSR**	0.317
25	80	21	1.5	37	18.8	9000	11000	**6405**	0.575
25	80	21	1.5	37	18.8	9000	11000	**6405NR**	0.575
28	58	16	1	10.7	6.65	14000	16000	**62/28**	0.173
28	58	16	1	10.7	6.65	14000		**62/28-2ZR**	0.173
28	58	16	1	10.7	6.65	14000		**62/28-2RSR**	0.173
28	68	18	1.1	19.5	11.5	10000	12000	**63/28**	0.328
28	68	18	1.1	19.5	11.5	10000		**63/28-2ZR**	0.328
28	68	18	1.1	19.5	11.5	10000		**63/28-2RSR**	0.328
30	55	9	0.3	11.2	7.35	12000	15000	**16006**	0.087
30	55	13	1	13.2	8.25	12000	15000	**6006**	0.129
30	55	13	1	13.2	8.25	12000		**6006-2ZR**	0.129
30	55	13	1	13.2	8.25	7000		**6006-2RSR**	0.129
30	55	13	1	13.2	8.25	12000	15000	**6006NR**	0.129
30	62	16	1	19.5	11.3	10000	13000	**6206**	0.210
30	62	16	1	19.5	11.3	10000		**6206-2ZR**	0.210
30	62	16	1	19.5	11.3	7500		**6206-2RSR**	0.210
30	62	16	1	19.5	11.3	10000	10000	**6206NR**	0.210
30	62	20	1	19.5	11.3	10000		**62206-2RSR**	0.236
30	72	19	1.1	29.9	15.8	9000	11000	**6306**	0.371
30	72	19	1.1	29.9	15.8	9000		**6306-2ZR**	0.371
30	72	19	1.1	29.9	15.8	6000		**6306-2RSR**	0.371
30	72	19	1.1	29.9	15.8	9000	11000	**6306NR**	0.371
30	72	27	1.1	26.6	14.9	9000		**62306-2RSR**	0.473

SINGLE ROW DEEP GROOVE BALL BEARINGS

S.C. URB RULMENTI SUCEAVA S.A.

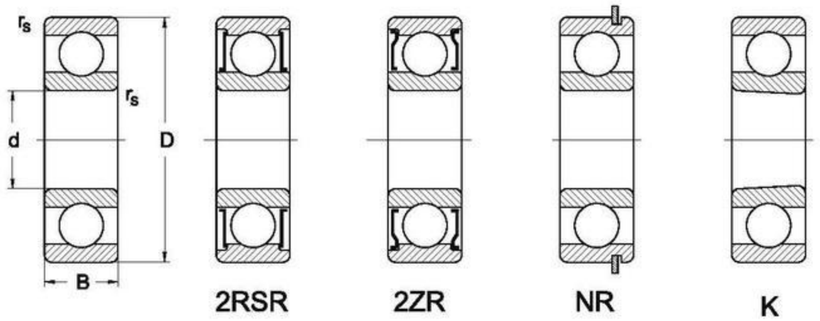

Dimensions				Basic Radial Load		Speed Limit		Bearing Type	Weight
d	D	B	r_{smin}	Dynamic C_r	Static C_{or}	Grease	Oil		
[mm]	[mm]	[mm]	[mm]	[kN]	[kN]	[min^{-1}]	[min^{-1}]	-	-
30	90	23	1.5	47.3	24.5	8500	10000	**6406**	0.785
30	90	23	1.5	47.3	24.5	8500	10000	**6406NR**	0.785
32	65	17	1	23	13	10000	12000	**62/32**	0.228
32	65	17	1	23	13	10000		**62/32-2ZR**	0.228
32	65	17	1	23	13	10000		**62/32-2RSR**	0.228
32	75	20	1.1	30	16	9000	11000	**63/32**	0.228
32	75	20	1.1	30	16	9000		**63/32-2ZR**	0.228
32	75	20	1.1	30	16	9000		**63/32-2RSR**	0.228
35	62	9	0.3	12.2	8.85	10000	13000	**16007**	0.111
35	62	14	1	15.9	10.3	10000		**6007**	0.164
35	62	14	1	15.9	10.3	10000		**6007-2ZR**	0.164
35	62	14	1	15.9	10.3	7000		**6007-2RSR**	0.164
35	62	14	1	25.7	15.4	9000	11000	**6007NR**	0.164
35	72	17	1.1	25.7	15.4	9000	11000	**6207K**	0.315
35	72	17	1.1	25.7	15.4	9000		**6207-2ZR**	0.315
35	72	17	1.1	25.7	15.4	6000		**6207-2RSR**	0.315
35	72	17	1.1	25.7	15.4	9000	11000	**6207NR**	0.315
35	80	21	1.5	33.5	18.3	8500		**6307-2ZR**	0.450
35	72	23	1.1	25.7	15.4	9000		**62207-2RSR**	0.375
35	80	21	1.5	33.5	18.3	8500	10000	**6307**	0.450
35	80	21	1.5	33.5	18.3	8500	10000	**6307K**	0.450
35	80	21	1.5	33.5	18.3	5600		**6307-2RSR**	0.450
35	21	31	1.5	33.5	18.3	8500	10000	**6307NR**	0.450
35	80	31	1.5	33.5	18.3	8500		**62307-2RSR**	0.658
35	100	25	1.5	55.5	29.4	7000	8500	**6407**	0.954
35	100	25	1.5	55.5	29.4	7000	8500	**6407NR**	0.954
40	68	9	0.3	13.3	9.8	9500	12000	**16008**	0.130
40	68	15	1	16.8	9.3	9500	12000	**6008**	0.210
40	68	15	1	16.8	11.6	9500		**6008-2ZR**	0.210
40	68	15	1	16.8	11.6	6000		**6008-2RSR**	0.210
40	68	15	1	16.8	11.6	9500	12000	**6008NR**	0.210
40	80	18	1.1	32	17.8	8500	10000	**6208**	0.402
40	80	18	1.1	32	17.8	8500	10000	**6208K**	0.402
40	80	18	1.1	32	17.8	8500		**6208-2ZR**	0.402
40	80	18	1.1	32	17.8	5600		**6208-2RSR**	0.402
40	80	18	1.1	32	17.8	8500	10000	**6208NR**	0.402

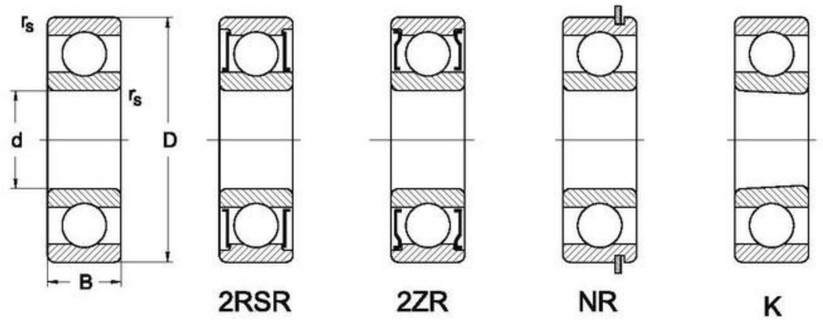

Dimensions				Basic Radial Load		Speed Limit		Bearing Type	Weight
d	D	B	r_{smin}	Dynamic C_r	Static C_{or}	Grease	Oil		
[mm]	[mm]	[mm]	[mm]	[kN]	[kN]	[min^{-1}]	[min^{-1}]	-	-
40	80	23	1.1	32	19.8	8500		**62208-2RSR**	0.460
40	90	23	1.5	40.7	24	7500	9000	**6308**	0.635
40	90	23	1.5	40.7	24	7500	9000	**6308K**	0.635
40	90	23	1.5	40.7	24	7500		**6308-2ZR**	0.635
40	90	23	1.5	40.7	24	5000		**6308-2RSR**	0.635
40	90	23	1.5	40.7	24	7500	9000	**6308NR**	0.635
40	90	33	1.5	40.7	24	7500		**62308-2RSR**	0.874
40	90	20	1.5	40.7	24	8500		**65108NR**	0.659
40	110	27	2	64	35	6700	7500	**6408**	1.230
40	110	27	2	64	35	6700	8000	**6408NR**	1.230
45	75	10	0.6	15.5	12.3	9000	11000	**16009**	0.170
45	75	16	1	21	15	9000	11000	**6009**	0.261
45	75	16	1	21	15	9000		**6009-2ZR**	0.261
45	75	16	1	21	15	5600		**6009-2RSR**	0.261
45	75	16	1	21	15	9000	11000	**6009NR**	0.261
45	85	19	1.1	32.7	20.2	7500	9000	**6209**	0.414
45	85	19	1.1	32.7	20.2	7500	9000	**6209K**	0.414
45	85	19	1.1	32.7	20.2	5300		**6209-2ZR**	0.414
45	85	19	1.1	32.7	20.2	5300		**6209-2RSR**	0.414
45	85	23	1.1	32.7	20.2	8000	9500	**6209NR**	0.414
45	85	23	1.1	32.7	20.2	8000		**62209-2RSR**	0.481
45	100	25	1.5	52.8	31.7	6700	8000	**6309**	0.838
45	100	25	1.5	52.8	31.7	6700	8000	**6309K**	0.838
45	100	25	1.5	52.8	31.7	6700		**6309-2ZR**	0.838
45	100	25	1.5	52.8	31.7	4500		**6309-2RSR**	0.838
45	100	25	1.5	52.8	31.7	6700	8000	**6309NR**	0.838
45	100	36	1.5	52.8	31.7	6700		**62309-2RSR**	1.180
45	120	29	2	76.8	44.9	5600	6700	**6409**	1.540
45	120	29	2	76.8	44.9	5600	6700	**6409NR**	1.540
45	100	21	1.5	52.8	31.7	6000		**65109N**	0.714
50	80	10	0.6	16.3	13.1	8500	10000	**16010**	0.188
50	80	16	1	20.8	13.7	8500	10000	**6010**	0.260
50	80	16	1	21.8	16.5	8500	10000	**6010K**	0.260
50	80	16	1	21.8	16.5	8500		**6010-2ZR**	0.260
50	80	16	1	21.8	16.5	5300		**60102RSR**	0.260
50	90	20	1.1	35.1	23.1	7000	8500	**6210**	0.460

SINGLE ROW DEEP GROOVE BALL BEARINGS

S.C. URB RULMENTI SUCEAVA S.A.

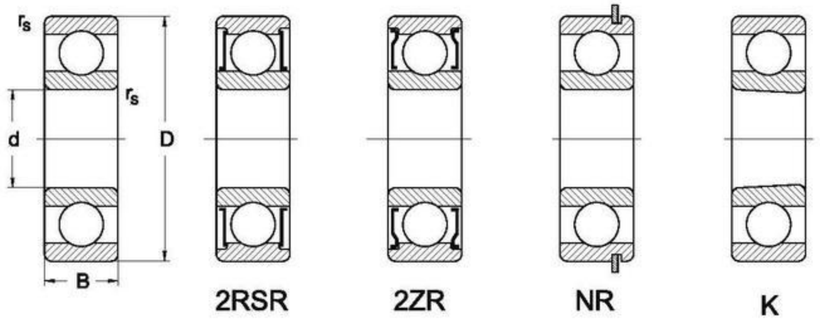

Dimensions				Basic Radial Load		Speed Limit		Bearing Type	Weight
d	D	B	r_{smin}	Dynamic C_r	Static C_{or}	Grease	Oil		
[mm]	[mm]	[mm]	[mm]	[kN]	[kN]	[min^{-1}]	[min^{-1}]	-	-
50	90	20	1.1	35.1	23.1	7000	8500	**6210K**	0.460
50	90	20	1.1	35.1	23.1	7000		**6210-2ZR**	0.460
50	90	20	1.1	35.1	23.1	4500		**6210-2RSR**	0.460
50	90	20	1.1	35.1	23.1	7000	8500	**6210NR**	0.460
50	90	23	1.1	35.1	23.1	7000		**62210-2RSR**	0.514
50	110	27	2	61.8	37.9	6000	7000	**6310**	1.060
50	110	27	2	61.8	37.9	6000	7000	**6310K**	1.060
50	110	27	2	61.8	37.9	6000		**6310-2ZR**	1.060
50	110	27	2	61.8	37.9	4000		**6310-2RSR**	1.060
50	110	27	2	61.8	37.9	6000	7000	**6310NR**	1.060
50	110	40	2	61.8	37.9	6000		**62310-2RSR**	1.650
55	90	11	0.6	19.3	16.3	7500	9000	**16011**	0.260
55	90	18	1.1	28.1	17	7500	9000	**6011**	0.390
55	90	18	1.1	28.3	21.2	7500		**6011-2ZR**	0.390
55	90	18	1.1	28.3	21.2	4500		**6011-2RSR**	0.390
55	90	18	1.1	28.3	21.2	7500	9000	**6011NR**	0.390
55	100	21	1.5	43.4	29.3	6300	7500	**6211**	0.611
55	100	21	1.5	43.4	29.3	6300	7500	**6211K**	0.611
55	100	21	1.5	43.4	29.3	6300		**6211-2ZR**	0.611
55	100	21	1.5	43.4	29.3	4000		**6211-2RSR**	0.611
55	100	21	1.5	43.4	29.3	6300		**6211NR**	0.611
55	120	29	2	71.5	44.6	5300	6300	**6311**	1.380
55	120	29	2	71.5	44.6	5300	6300	**6311K**	1.380
55	120	29	2	71.5	44.6	5300		**6311-2ZR**	1.380
55	120	29	2	71.5	44.6	3600		**6311-2RSR**	1.380
55	120	29	2	71.5	44.6	5300	6300	**6311NR**	1.380
60	95	18	1.1	29.4	23.2	6700	8000	**6012**	0.420
60	95	18	1.1	29.4	23.2	6700		**6012-2ZR**	0.420
60	95	18	1.1	29.4	23.2	4300		**6012-2RSR**	0.420
60	95	18	1.1	29.4	23.2	7000	8500	**6012NR**	0.420
60	110	22	1.5	52.4	36	6000	7000	**6212**	0.780
60	110	22	1.5	52.4	36	6000	7000	**6212K**	0.780
60	110	22	1.5	52.4	36	6000		**6212-2ZR**	0.780
60	110	22	1.5	52.4	36	4000		**6212-2RSR**	0.780
60	110	22	1.5	52.4	36	6000	7000	**6212NR**	0.780

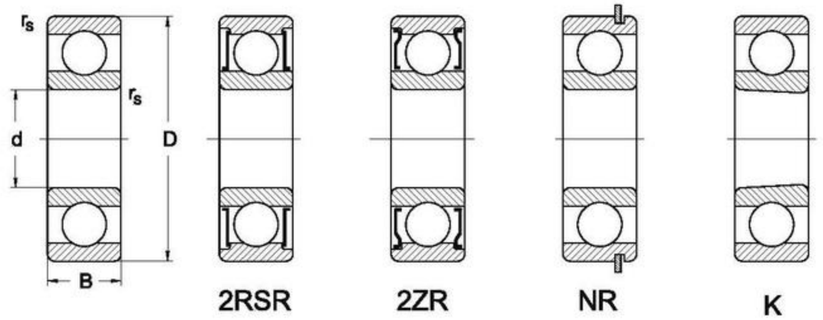

Dimensions				Basic Radial Load		Speed Limit		Bearing Type	Weight
d	D	B	r_{smin}	Dynamic C_r	Static C_{or}	Grease	Oil		
[mm]	[mm]	[mm]	[mm]	[kN]	[kN]	[min^{-1}]	[min^{-1}]	-	-
60	130	31	2.1	81.8	51.9	5000	6000	**6312**	1.720
60	130	31	2.1	81.8	51.9	5000	6000	**6312K**	1.720
60	130	31	2.1	81.8	51.9	5000		**6312-2ZR**	1.720
60	130	31	2.1	81.8	51.9	3400		**6312-2RSR**	1.720
60	130	31	2.1	81.8	51.9	5000		**6312NR**	1.720
60	95	11	0.6	20	17.6	7000	8500	**16012**	0.280
62	110	22	1.5	47.5	28	6000	7000	**62/62**	0.600
65	100	11	0.6	21.5	14.6	6300	7500	**16013**	0.300
65	100	18	1.1	30.5	25.2	6300	7500	**6013**	0.440
65	100	18	1.1	30.5	25.2	6300	7500	**6013K**	0.440
65	100	18	1.1	30.5	25.2	6300		**6013-2ZR**	0.440
65	100	18	1.1	30.5	25.2	4000		**6013-2RSR**	0.440
65	100	18	1.1	30.5	25.2	6300	7500	**6013NR**	0.440
65	120	23	1.5	57.2	40	5300	6300	**6213**	0.995
65	120	23	1.5	57.2	40	5300		**6213-2ZR**	0.995
65	120	23	1.5	57.2	40	3600		**6213-2RSR**	0.995
65	120	23	1.5	57.2	40	5300	6300	**6213NR**	0.995
65	140	33	3.1	92.7	59.7	4800	5600	**6313**	2.100
65	140	33	3.1	92.7	59.7	4800		**6313-2ZR**	2.100
65	140	33	2.1	92.7	59.7	4800		**6313-2RSR**	2.100
65	140	33	2.1	92.7	59.7	4800	5600	**6313NR**	2.100
70	110	13	0.6	27.9	25	6000	7000	**16014**	0.433
70	110	20	1.1	38.1	30.9	6000	7000	**6014**	0.600
70	110	20	1.1	38.1	30.9	6000		**6014-2ZR**	0.600
70	110	20	1.1	38.1	30.9	3600		**6014-2RSR**	0.600
70	110	20	1.1	38.1	30.9	6000	7000	**6014NR**	0.600
70	125	24	1.5	62.2	44.1	5000	6000	**6214**	1.070
70	125	24	1.5	62.2	44.1	5000		**6214-2ZR**	1.070
70	125	24	1.5	62.2	44.1	3400		**6214-2RSR**	1.070
70	125	24	1.5	62.2	44.1	5000	6000	**6214NR**	1.070
75	115	13	0.6	28.5	26.8	5600	6700	**16015**	0.460
75	115	20	1.1	39.7	33.5	5600	6700	**6015**	0.640
75	115	20	1.1	39.7	33.5	5600		**6015-2ZR**	0.640
75	115	20	1.1	39.7	33.5	3400		**6015-2RSR**	0.640
75	115	20	1.1	39.7	33.5	5600	6700	**6015NR**	0.640

SPHERICAL ROLLER BEARINGS

Spherical roller bearings are designed to take misalignment, reasonable speeds (dependent on application details) and high loads (radial load and axial load in both directions). Spherical roller bearings comprising barrel-shaped convex rollers, double-row inner ring and outer ring, a central guide rib floating on the inner ring and special pressed sheet cage.

These bearings are manufactured in URB in the C type: two window-type steel cages, flangeless inner ring and guide ring centered on the inner ring. Lubrication holes and a lubrication groove can be provided on the outer ring.

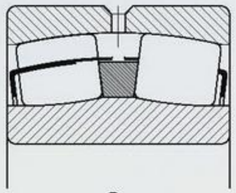

C

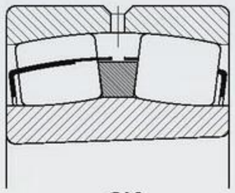

CK

Main applications: Paper manufacturing equipment, speed reducers, rolling mill pinion stands, table rollers, crushers, shaker screens, printing equipment, wood working equipment, speed reducers.

Radial clearance: Spherical roller bearings are generally manufactured with normal radial clearance. At request, they can be manufactured with clearance larger than normal (C3, C4 etc.) or smaller than normal (C2).

S.C. URB RULMENTI SUCEAVA S.A.

Radial clearance for spherical bearings

Bore diameter d		Clearance group symbol for bearing with cylindrical bore									
		C2		Normal		C3		C4		C5	
over	up to	min.	max.	min.	max.	min.	max.	min.	max.	min.	max.
mm		µm									
24	30	15	25	25	40	40	55	55	75	75	95
30	40	15	30	30	45	45	60	60	80	80	100
40	50	20	35	35	55	55	75	75	100	100	125
50	65	20	40	40	65	65	90	90	120	120	150
65	80	30	50	50	80	80	110	110	145	145	180
80	100	35	60	60	100	100	135	135	180	180	225
100	120	40	75	75	120	120	160	160	210	210	260
120	140	50	95	95	145	145	190	190	240	240	300

Bore diameter d		Clearance group symbol for bearing with tapered bore									
		C2		Normal		C3		C4		C5	
over	up to	min.	max.	min.	max.	min.	max.	min.	max.	min.	max.
mm		µm									
24	30	20	30	30	40	40	55	55	75	75	95
30	40	25	35	35	50	50	65	65	85	85	105
40	50	30	45	45	60	60	80	80	100	100	130
50	65	40	55	55	75	75	95	95	120	120	160
65	80	50	70	70	95	95	120	120	150	150	200
80	100	55	80	80	110	110	140	140	180	180	230
100	120	65	100	100	135	135	170	170	220	220	280
120	140	80	120	120	160	160	200	200	260	260	330

Technical executions conditions:
The basic load ratings are established with ISO 76 and ISO 281.
Dimensions: in accordance with ISO 15.
Tolerance classes: P0, P6, according ISO 492.

DOUBLE ROW SPHERICAL ROLLER BEARINGS

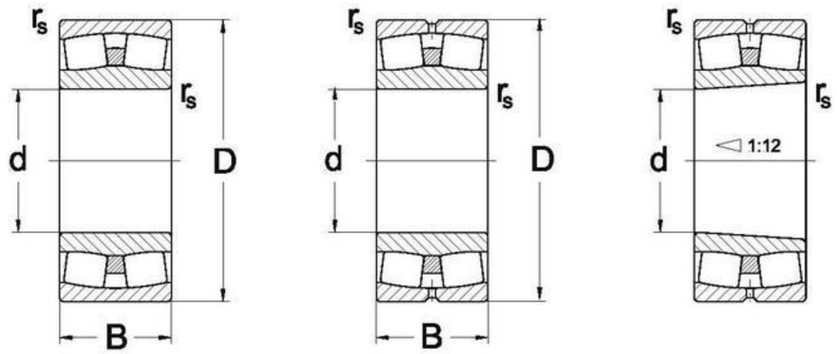

C CW33 CKW33

Dimensions				Load Ratings. Factors						Speed Limit		Bearing Type	Weight
d	D	B	r_{smin}	Dynamic C_r	e	Y_1	Y_2	Static C_{or}	Y_0	Grease	Oil		
[mm]	[mm]	[mm]	[mm]	[kN]	-	-	-	[kN]	-	[min^{-1}]	[min^{-1}]	-	-
25	52	18	1	43	0.35	1.9	2.9	43	1.8	7500	10000	**22205C**	0.180
25	52	18	1	43	0.35	1.9	2.9	43	1.8	7500	10000	**22205CK**	0.180
25	52	18	1	43	0.35	1.9	2.9	43	1.8	7500	10000	**22205CKW33**	0.180
30	62	20	1	59	0.38	1.9	2.8	62	1.9	6300	8500	**22206C**	0.280
30	62	20	1	59	0.36	1.9	2.8	62	1.9	6300	8500	**22206CK**	0.280
30	62	20	1	59	0.36	1.9	2.8	62	1.9	6300	8500	**22206CKW33**	0.280
35	72	23	1.1	81	0.36	1.9	2.8	88	1.9	5300	7000	**22207C**	0.430
35	72	23	1.1	81	0.36	1.9	2.8	88	1.9	5300	7000	**22207CK**	0.430
35	72	23	1.1	81	0.36	1.9	2.8	88	1.9	5300	7000	**22207CKW33**	0.430
40	80	23	1.1	88	0.31	2.2	3.2	98	2.1	4800	6300	**22208C**	0.510
40	80	23	1.1	88	0.31	2.2	3.2	98	2.1	4800	6300	**22208CK**	0.510
40	80	23	1.1	88	0.31	2.2	3.2	98	2.1	4800	6300	**22208CKW33**	0.510
40	90	23	1.5	99	0.26	2.6	3.9	120	2.6	4500	6000	**21308C**	0.710
40	90	23	1.5	99	0.26	2.6	3.9	120	2.6	4500	6000	**21308CK**	0.700
40	90	23	1.5	99	0.26	2.6	3.9	120	2.6	4500	6000	**21308CKW33**	0.700
40	90	33	1.5	140	0.4	1.6	2.5	145	1.6	4300	5600	**22308C**	1.100
40	90	33	1.5	140	0.4	1.6	2.5	145	1.6	4300	5600	**22308CK**	1.000
40	90	33	1.5	140	0.4	1.6	2.5	145	1.6	4300	5600	**22308CKW33**	1.000
45	85	23	1.1	93	0.3	2.3	3.4	105	2.2	4500	6000	**22209C**	0.560
45	85	23	1.1	93	0.3	2.3	3.4	105	2.2	4500	6000	**22209CK**	0.550
45	85	23	1.1	93	0.3	2.3	3.4	105	2.2	4500	6000	**22209CKW33**	0.550
45	100	25	1.5	120	0.26	2.6	3.9	135	2.6	4000	5300	**21309C**	0.950
45	100	25	1.5	120	0.26	2.6	3.9	135	2.6	4000	5300	**21309CK**	0.940
45	100	25	1.5	120	0.26	2.6	3.9	135	2.6	4000	5300	**21309CW33**	0.940
45	100	36	1.5	165	0.4	1.7	2.5	190	1.6	3800	5000	**22309C**	1.350
45	100	36	1.5	165	0.4	1.7	2.5	190	1.6	3800	5000	**22309CK**	1.300

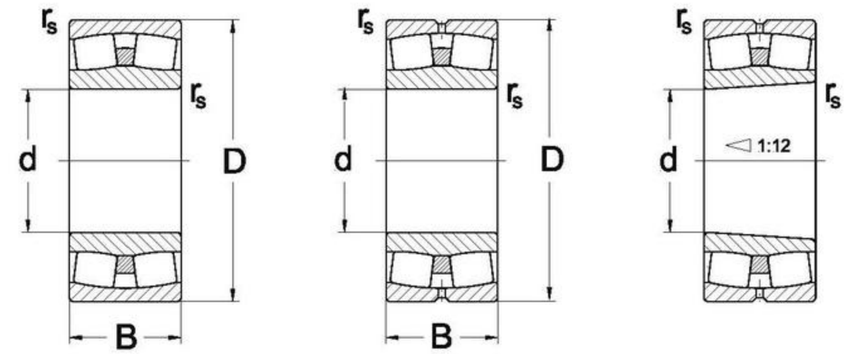

C CW33 CKW33

Dimensions				Load Ratings. Factors						Speed Limit		Bearing Type	Weight
d	D	B	r_{smin}	Dynamic C_r	e	Y_1	Y_2	Static C_{or}	Y_0	Grease	Oil		
[mm]	[mm]	[mm]	[mm]	[kN]	-	-	-	[kN]	-	[min^{-1}]	[min^{-1}]	-	-
45	100	36	1.5	165	0.4	1.7	2.5	190	1.6	3800	5000	**22309CKW33**	1.300
50	90	23	1.1	100	0.26	2.6	3.9	120	2.5	4000	5300	**22210C**	0.600
50	90	23	1.1	100	0.26	2.6	3.9	120	2.5	4000	5300	**22210CK**	0.600
50	90	23	1.1	100	0.26	2.6	3.9	120	2.5	4000	5300	**22210CKW33**	0.600
50	110	27	2	120	0.24	2.8	4.1	130	2.7	3600	4800	**21310C**	1.250
50	110	27	2	120	0.24	2.8	4.1	130	2.7	3600	4800	**21310CK**	1.200
50	110	27	2	120	0.24	2.8	4.1	130	2.7	3600	4800	**21310CKW33**	1.200
50	110	40	2	190	0.4	1.7	2.5	220	1.6	3400	4500	**22310C**	1.850
50	110	40	2	190	0.4	1.7	2.5	220	1.6	3400	4500	**22310CK**	1.80
50	110	40	2	190	0.4	1.7	2.5	220	1.6	3400	4500	**22310CKW33**	1.80
55	100	25	1.5	120	0.27	2.5	3.8	140	2.5	3800	5000	**22211C**	0.820
55	100	25	1.5	120	0.27	2.5	3.8	140	2.5	3800	5000	**22211CK**	0.800
55	100	25	1.5	120	0.27	2.5	3.8	140	2.5	3800	5000	**22211CKW33**	0.800
55	120	29	2	135	0.24	2.8	4.1	155	2.7	3200	4300	**213111C**	1.650
55	120	29	2	135	0.24	2.8	4.1	155	2.7	3200	4300	**21311CK**	1.600
55	120	29	2	135	0.24	2.8	4.1	155	2.7	3200	4300	**21311CKW33**	1.600
55	120	43	2	230	0.4	1.7	2.5	265	1.6	3000	4000	**22311C**	2.350
55	120	43	2	230	0.4	1.7	2.5	265	1.6	3000	4000	**22311CK**	2.300
55	120	43	2	230	0.4	1.7	2.5	265	1.6	3000	4000	**22311CKW33**	2.300
60	110	28	1.5	145	1.27	2.5	3.7	175	2.4	3400	4500	**22212C**	1.100
60	110	28	1.5	145	1.27	2.5	3.7	175	2.4	3400	4500	**22212CK**	1.100
60	110	28	1.5	145	1.27	2.5	3.7	175	2.4	3400	4500	**22212CKW33**	1.100
65	120	31	1.5	180	0.28	2.4	3.6	220	2.4	3000	4000	**22213C**	1.400
65	120	31	1.5	180	0.28	2.4	3.6	220	2.4	3000	4000	**22213CK**	1.400
65	120	31	1.5	180	0.28	2.4	3.6	220	2.4	3000	4000	**22213CKW33**	1.400

TAPERED ROLLER BEARINGS

Tapered roller bearings are designed to support large radial and large thrust loads. These loads can take the form of constant loads or shock loads. Tapered roller bearings are used in many car hubs, where they are usually mounted in pairs facing opposite directions. This gives them the ability to take thrust loads in both directions.

Tapered rollers assembled in the bearings are guided by the cone back face rib. The raceway surfaces of cone and cup and the rolling contact surface of rollers are designed so that the respective apexes converge at a point on the bearing center line.

Single-row bearings can accommodate radial load and axial load in one direction. Bearings are classified into standard, intermediate and steep types, in accordance with their contact angle. The larger the contact angle is, the greater the bearing resistance to axial load.

Main applications:

Automobile: Front and rear wheels, transmissions, differential pinion shafts
Others: Machine tool spindles, construction equipment, large size agriculture equipment, railway rolling stock speed reduction gears, rolling mill roll necks and speed reducers, etc.
Technical executions conditions:
The basic load ratings are established with ISO 76 and ISO 281.
Dimensions:
The main dimensions of spherical roller bearings are in accordance with ISO 15.
Tolerance classes: P0, P6, according ISO 492.

SINGLE ROW TAPERED ROLLER BEARINGS

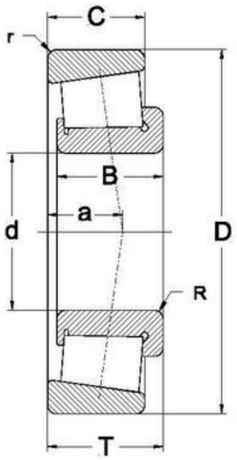

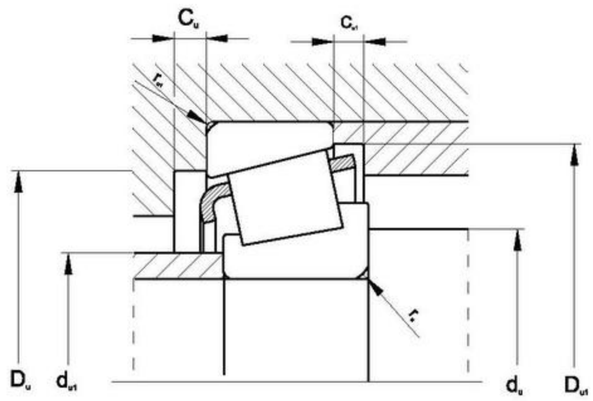

Dimensions								Basic Radial Load. Factors					Bearing Type
d	D	B	C	T	R min	r min	a	Dynamic C_r	e	Y	Static C_{or}	Y_0	
[mm]								[kN]	-	-	[kN]	-	-
15	42	13	11	14.25	1	1	9	21.5	0.28	2.1	19.8	1.1	**30302A**
17	40	12	11	13.25	1	1	10	18.3	0.35	1.7	19	0.9	**30203A**
17	47	14	12	15.25	1	1	10	26	0.28	2.1	24.5	1.1	**30303A**
17	47	19	16	20.25	1	1	12	34	0.28	2.1	35.5	1.1	**32303A**
20	42	15	12	15	0.6	0.6	10	26	0.37	1.6	28.5	0.9	**32004XA**
20	47	14	12	15.25	1	1	11	25.8	0.35	1.7	26.4	0.9	**30204A**
20	52	15	13	16.25	1.5	1.5	11	32	0.3	2	32	1.1	**30304A**
20	52	21	18	22.25	1.5	1.5	14	42.5	0.3	2	47	1.1	**32304A**
25	47	15	11.5	15	0.6	0.6	11	26	0.43	1.4	33.5	0.8	**32005XA**
25	52	15	13	16.25	1	1	12	30.1	0.37	1.6	32.9	0.9	**30205A**
25	52	18	15	19.25	1	1	16	31	0.33	1.8	37	1	**32205A**
25	62	17	15	18.25	1.5	1.5	13	43	0.3	2	43	1.1	**30305A**
25	62	17	13	18.25	1.5	1.5	20	39	0.83	0.7	41	0.4	**31305A**
25	62	24	20	25.25	1.5	1.5	15	58.3	0.3	2	60.3	1.1	**32305A**
30	55	17	13	17	1	1	13	34	0.43	1.4	45.5	0.8	**32006XA**
30	62	16	14	17.25	1	1	14	40.5	0.37	1.6	45.1	0.9	**30206A**
30	62	20	17	21.25	1	1	15	49	0.37	1.6	61	0.9	**32206A**
30	72	19	16	20.75	1.5	1.5	15	52.9	0.31	1.9	51.8	1.1	**30306A**
30	72	19	14	20.75	1.5	1.5	22	46.5	0.83	0.7	49.5	0.4	**31306A**
30	72	27	23	28.75	1.5	1.5	18	75.8	0.31	1.9	82.7	1.1	**32306A**
35	62	18	14	18	1	1	15	35.9	0.46	1.3	52.4	0.7	**32007XA**
35	72	17	15	18.25	1.5	1.5	15	50.5	0.37	1.6	54.7	0.9	**30207A**
35	72	23	19	24.25	1.5	1.5	17	66.2	0.37	1.6	77.5	0.9	**32207A**
35	80	21	18	22.25	2	2	16	71.2	0.31	1.9	72.5	1.1	**30307A**
35	80	21	15	22.75	2	2	25	58.1	0.83	0.7	64	0.4	**31307A**
35	80	31	25	32.75	2	2	20	95.3	0.31	1.9	106	1.1	**32307A**
40	68	19	14.5	19	1	1	15	48.8	0.37	1.6	65.6	0.9	**32008XA**
40	80	18	16	19.75	1.5	1.5	16	57.9	0.37	1.6	62.4	0.9	**30208A**

Speed Limit		Wheight	Mounting dimensions									Bearing Type
Grease	Oil		d_{u1} max	d_u min	D_u min	D_u max	D_{u1} min	C_u min	C_{u1} min	r_u max	r_{u1} max	
[min^{-1}]	[min^{-1}]	[Kg]	[mm]									-
9000	13000	0.090	22	21	36	36	38	2	3	1	1	**30302A**
9000	13000	0.074	23	23	34	34	37	2	2	1	1	**30203A**
8500	12000	0.130	25	23	40	41	42	2	3	1	1	**30303A**
8000	11000	0.170	24	23	39	41	43	3	4	1	1	**32303A**
8500	12000	0.097	25	25	36	37	39	3	3	0.6	0.6	**32004XA**
8000	11000	0.120	27	26	40	41	43	2	3	1	1	**30204A**
8000	11000	0.170	28	27	44	45	47	2	3	1.5	1.5	**30304A**
7500	1000	0.221	27	27	43	45	47	3	4	1.5	1.5	**32304A**
8000	11000	0.113	30	30	40	42	44	3	3.5	0.6	0.6	**32005XA**
7500	10000	0.150	31	31	44	46	48	2	3	1	1	**30205A**
7500	10000	0.182	31	31	44	46	48	3	4	1	1	**32205A**
6700	9000	0.250	34	32	54	55	57	2	3	1.5	1.5	**30305A**
5600	7500	0.255	34	32	47	55	58	3	5	1.5	1.5	**31305A**
6000	8000	0.360	33	32	53	55	57	3	5	1.5	1.5	**32305A**
6700	9000	0.017	35	38	48	49	52	3	4	1	1	**32006XA**
6300	8500	0.220	37	36	53	56	57	2	3	1	1	**30206A**
6300	8500	0.280	37	36	52	56	59	3	4	1	1	**32206A**
5600	7500	0.380	40	37	62	65	66	3	4.5	1.5	1.5	**30306A**
5000	6700	0.390	40	37	55	65	68	3	6.5	1.5	1.5	**31306A**
5300	7000	0.550	39	37	59	65	66	4	5.5	1.5	1.5	**32306A**
6000	8000	0.220	40	41	54	56	59	4	4	1	1	**32007XA**
5300	7000	0.320	44	42	62	65	67	3	3	1.5	1.5	**30207A**
5300	7000	0.420	43	42	61	65	67	3	5.5	1.5	1.5	**32207A**
5000	6700	0.520	45	44	70	71	74	3	4.5	2	1.5	**30307A**
4500	6000	0.520	44	44	62	71	76	4	7.5	2	1.5	**31307A**
4800	6300	0.730	44	44	66	71	74	4	7.5	2	1.5	**32307A**
5300	7000	0.270	46	46	60	62	65	4	4.5	1	1	**32008XA**
4800	6300	0.420	49	47	69	73	74	3	3.5	1.5	1.5	**30208A**

SINGLE ROW TAPERED ROLLER BEARINGS

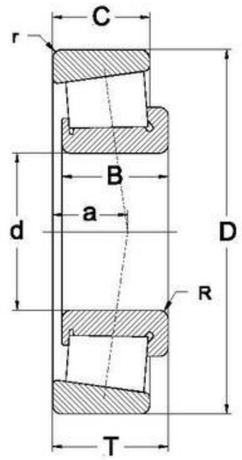

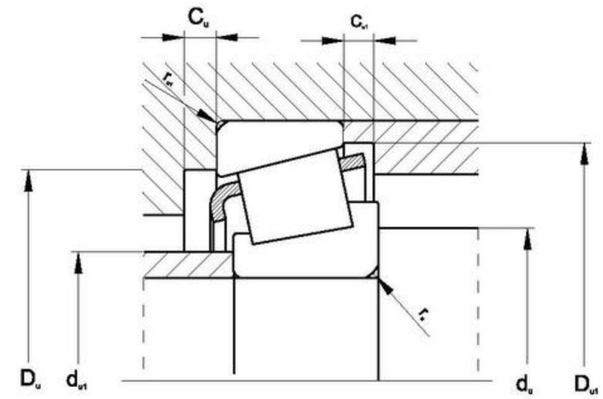

Dimensions								Basic Radial Load. Factors					Bearing Type
d	D	B	C	T	R min	r min	a	Dynamic C_r	e	Y	Static C_{or}	Y_0	
[mm]								[kN]	-	-	[kN]	-	-
40	80	23	19	24.75	1.5	1.5	19	66.2	0.37	1.6	79.5	0.9	**32208A**
40	90	23	20	25.25	2	1.5	19	83.9	0.35	1.7	91.3	0.9	**30308A**
40	90	23	17	25.25	2	1.5	28	74.6	0.83	0.7	60.8	0.4	**31308A**
40	90	33	27	35.25	2	1.5	23	105	0.35	1.7	122	0.9	**32308A**
45	75	20	15.5	20	1	1	16	57	0.4	1.5	82.2	0.8	**32009XA**
45	85	19	16	20.75	1.5	1.5	18	60.1	0.4	1.5	67.1	0.8	**30209A**
45	85	23	19	24.75	1.5	1.5	20	76.5	0.4	1.5	91.6	0.8	**32209A**
45	100	25	22	27.25	2	1.5	21	106	0.35	1.7	118	0.9	**30309A**
45	100	25	18	27.25	2	1.5	31	88.9	0.83	0.7	97.1	0.4	**31309A**
45	100	36	30	38.25	2	1.5	25	133	0.35	1.7	159	0.9	**32309A**
50	80	20	15.5	20	1	1	18	58.5	0.43	1.4	88.5	0.8	**32010XA**
50	90	20	17	21.75	1.5	1.5	19	69.7	0.43	1.4	81.3	0.8	**30210A**
50	90	23	19	24.75	1.5	1.5	21	79.1	0.43	1.4	95.8	0.8	**32210A**
50	110	27	23	29.25	2.5	2	23	120	0.35	1.7	133	0.9	**30310A**
50	110	27	19	29.25	2.5	2	34	102	0.83	0.7	112	0.4	**31310A**
50	110	40	33	42.25	2.5	2	27	160	0.35	1.7	194	0.9	**32310A**
55	90	23	17.5	23	1.5	1.5	20	77	0.4	1.5	117	0.8	**32011XA**
55	100	21	18	22.75	2	1.5	20	83	0.4	1.5	95.2	0.8	**30211A**
55	100	25	21	26.75	2	1.5	22	96.2	0.4	1.5	115	0.8	**32211A**
55	120	29	25	31.5	2.5	2	24	146	0.35	1.7	166	0.9	**30311A**
55	120	29	21	31.5	2.5	2	37	118	0.83	0.7	133	0.4	**31311A**
55	120	43	35	45.5	2.5	2	29	191	0.35	1.7	235	0.9	**32311A**
60	95	23	17.5	23	1.5	1.5	21	78.5	0.43	1.4	119	0.8	**32012XA**
60	110	22	19	23.75	2	1.5	22	91.6	0.4	1.5	105	0.8	**30212A**
60	110	28	24	29.75	2	1.5	24	122	0.4	1.5	152	0.8	**32212A**
65	100	23	17.5	23	1.5	1.5	22	80.6	0.46	1.3	123	0.7	**32013XA**
65	120	23	20	24.75	2	1.5	23	11	0.4	1.5	129	0.8	**30213A**
65	120	31	27	24.75	2	1.5	27	149	0.4	1.5	189	0.8	**32213A**
70	110	25	19	25	1.5	1.5	23	95.6	0.43	1.4	143	0.8	**32014XA**
75	115	25	19	25	1.5	1.5	25	97.3	0.46	1.3	149	0.7	**32015XA**

Speed Limit		Wheight	Mounting dimensions									Bearing Type
Grease	Oil		d_{u1} max	d_u min	D_u min	D_u max	D_{u1} min	C_u min	C_{u1} min	r_u max	r_{u1} max	
[min^{-1}]	[min^{-1}]	[Kg]	[mm]									-
4800	6300	0.510	48	47	68	73	75	3	5.5	1.5	1.5	**32208A**
4500	6000	0.700	52	49	77	81	82	3	5	2	1.5	**30308A**
4000	5300	0.685	51	49	71	81	86	4	8	2	1.5	**31308A**
4000	5300	0.983	50	49	73	81	82	4	8	2	1.5	**32308A**
4800	6300	0.330	51	51	67	69	72	4	4.5	1	1	**32009XA**
4500	6000	0.470	54	52	74	78	80	3	4.5	1.5	1.5	**30209A**
4500	6000	0.560	53	52	73	78	80	3	5.5	1.5	1.5	**32209A**
4000	5300	0.920	59	54	86	91	92	3	5	2	1.5	**30309A**
3400	4500	0.915	56	54	79	91	95	4	9	2	1.5	**31309A**
3600	4800	1.250	56	54	82	91	93	4	8	2	1.5	**32309A**
4500	6000	0.360	56	56	72	74	77	4	4.5	1	1	**32010XA**
4300	5600	0.530	58	57	79	83	85	3	4.5	1.5	1.5	**30210A**
4300	5600	0.600	58	57	78	83	85	3	5.5	1.5	1.5	**32210A**
3600	4800	1.190	65	60	95	100	102	4	6	2.5	2	**30310A**
3200	4300	1.160	62	60	87	100	104	4	10	2.5	2	**31310A**
3200	4300	1.830	62	60	90	100	102	5	9	2.5	2	**32310A**
4000	5300	0.540	63	62	81	83	86	4	5.5	1.5	1.5	**32011XA**
3800	5000	0.690	64	64	88	91	94	4	4.5	1.5	1.5	**30211A**
3800	5000	0.820	63	64	87	91	95	4	5.5	1.5	1.5	**32211A**
3200	4300	1.530	71	65	104	110	111	4	6.5	2	2	**30311A**
2800	3800	1.490	68	65	94	110	113	4	10.5	2	2	**31311A**
3000	4000	2.210	68	65	99	110	111	5	10.5	2	2	**32311A**
3800	5000	0.580	67	67	85	88	91	4	5.5	1.5	1.5	**32012XA**
3400	4500	0.860	70	69	96	101	103	4	4.5	2	1.5	**30212A**
3400	4500	1.100	69	69	95	101	104	4	5.5	2	1.5	**32212A**
3400	4500	0.620	72	72	90	93	97	4	5.5	1.5	1.5	**32013XA**
3000	4000	1.100	77	74	106	111	113	4	4.5	2	1.5	**30213A**
3000	4000	1.480	76	74	104	111	115	4	5.5	2	1.5	**32213A**
2400	3400	3.490	80	77	117	128	130	6	12	3	2.5	**32014XA**
2200	3200	4.100	86	82	125	138	140	6	12	3	2.5	**32015XA**